USER MANUAL

MODEL NUMBER:

FI-WC
FI-WCK
FI-WCV
FI-WC-AP
FI-WC-ST
AND RELATED UNITS

Wall Mounted Concentrate Foam Unit

English (Original Instructions)

READ ALL INSTRUCTIONS BEFORE OPERATING EQUIPMENT

WARNING

Read this manual completely and understand the machine before operating or servicing it.

- Read all instructions before installing or operating unit.
- Always wear appropriate personal protective equipment (PPE) when operating or servicing unit.
- Always follow all chemical safety precautions and handling instructions provided by the chemical manufacturer and Material Safety Data Sheet (MSDS).
- If this unit is modified or serviced with parts not listed in this manual, the unit may not operate correctly.
- Never point the discharge wand at yourself, another person, or any object you do not want covered in chemical.
- Always depressurize unit after use (as described in the After Use Instructions). Always store unit depressurized, with the discharge valve in the closed position.
- Do not exceed an incoming air pressure of 100 psi (7 bar).
- Do not exceed a fluid temperature of 100˚F (37˚C).
- Always flush the unit with fresh water for 5 minutes when switching from an alkaline to an acid or an acid to an alkaline.
- Never use unit with hydrocarbons or flammable products.
- Only use clean and dry air. Air must be filtered and free of moisture or pump life will be diminished. If needed, install an air dryer before unit.
- Do not use an air lubricator before the unit.

PROTECT THE ENVIRONMENT

Please dispose of packaging materials, old machine components, and hazardous fluids in an environmentally safe way according to local waste disposal regulations.

Always remember to recycle.

*Specifications and parts are subject to change without notice.

READ ALL INSTRUCTIONS BEFORE OPERATING EQUIPMENT

OPTIONS					
	Pump Seal Material		**Fluid Fittings**		**Discharge Wand Tip**
FI-WC	Santoprene (***standard***)	-	Stainless steel (***standard***)	-	Zero tip (***standard***)
	Viton (**V**)		All-poly (**AP**)		Fan tip (**ST**)
	Kalrez (**K**)				

Add bold option codes to item number as shown. For standard options, no option code is needed.

Examples:

- FI-WC (standard unit with Santoprene pump seals, stainless steel fluid fittings, and zero tip)
- FI-WCV (unit with Viton pump seals, stainless steel fluid fittings, and zero tip)
- FI-WCK-AP-ST (unit with Kalrez pump seals, all-poly fluid fittings, and fan tip)

REQUIREMENTS	
Compressed air requirements	40-80 psi (3-5 bar) with 5-10 cfm (141.6-283.3 l/min)
Water requirements	10-100 psi (0.69-6.9 bar) Backflow prevention is required – consult local plumbing ordinances for more information.
Liquid temperature range	40-100˚F (4.4-37˚C)
Chemical compatibility	Chemical products used with this equipment must be formulated for this type of application and compatible with unit materials and pump seals. For more information on chemical compatibility, consult the manufacturer or MSDS for your product or contact our customer service department.

SPECIFICATIONS	
Power type	Compressed air
Chemical pickup type	Draws from concentrated product
Dilution ratio range (water:chemical)*	14:1 to 320:1
Number of products unit can draw from (and whether it draws simultaneously or one at a time)	One product
Suction line length/diameter	8 ft. (2.4 m) clear hose with 1/4 in. (6.4 mm) inside diameter
Discharge hose diameter/length	50 ft. (15.2 m) hose, with 3/4 in. (19.1 mm) inside diameter
Discharge wand/tip type	7 in. (17.8 cm) stainless steel wand with zero tip and ball valve
Output distance	25-30 ft. (7.6-9.1 m)
Flow rate*	2 gal/min (7.6 l/min)
Pump seals	Santoprene, Viton, or Kalrez

*Dilution rates and flow rates given are based on chemical with viscosity of water and factory air pressure settings.

READ ALL INSTRUCTIONS BEFORE OPERATING EQUIPMENT

Installation Instructions:

1. Remove all components from packaging.
2. Select desired area to mount the control box.
   Note: We recommend mounting the control box at a height of 6 feet or less. The chemical suction line must reach the bottom of the chemical container. The bottom of the chemical container should not be positioned higher than the bottom of the control box.
3. Attach the control box mounting feet to the back of the control box, using the four screws provided in the parts package.
4. Mount the control box to the wall using four of the screws and plastic anchors provided in the parts package.
   Note: To drill holes for the plastic anchors, use a 5/16 inch drill bit.
5. Mount the hose hanger (SSHH-F) in a convenient location using the remaining two screws and anchors provided in the parts package.
6. Attach the discharge hose assembly (H34-50/H34-50-AP) to the discharge hose barb (HBSS1234/HB1234) and secure it with the larger hose clamp provided in the parts package.
7. Connect the air inlet hose barb (HBSS1438) provided in the parts package to the air inlet valve (BVB14) located on the side of the control box. Then attach a 3/8 inch I.D. air line from your air compressor to the air inlet hose barb, and secure it with the smaller hose clamp provided in the parts package.
8. Connect a water line to the unit. The control box has a 1/2 inch FPT water inlet fitting (SSA12). A garden hose adapter fitting assembly (SSA12, SNB34GH, SA12B) is included in the parts package.
   Note: A back-flow preventer must be installed in the water line – check local plumbing codes to ensure proper installation.
9. Open the cover of the control box. Insert the proper metering tip and connect the chemical intake line to the injector inlet barb.
   Note: Use the included metering tip color chart to determine the appropriate metering tip based on the product and dilution rate you will be using.
10. Place the other end of the chemical intake line into a chemical container.
    Note: The chemical suction line must reach the bottom of the chemical container. A strainer must be used on the chemical intake line.

METERING TIP COLOR CHART

Metering tip color	Ounces of chemical per gallon of water*	Dilution ratio (water:chemical)*
Turquoise	0.40	320:1
Pink	0.80	160:1
Light Blue	0.95	135:1
Brown	1.30	98:1
Red	1.40	92:1
White	1.85	69:1
Green	1.90	67:1
Blue	2.65	48:1
Yellow	2.95	43:1
Black	4.80	27:1
Purple	6.40	20:1
Gray	6.80	19:1
No Tip	9.20	14:1

*Injection rates will vary based on chemical viscosity, air pressure, and many other factors. We recommend testing unit output to verify injection rate prior to use.

Operation Instructions:

1. Follow all instructions from chemical manufacturer.
2. With the discharge valve (HV60/HV34) in the closed position, open the air inlet valve (BVB14).
3. Slowly open the discharge ball valve (HV60/HV34) to begin foaming. The discharge ball valve (HV60/HV34) should be completely open while foaming.
4. While the unit is running and discharging product, adjust the needle valve (NV14Y), located inside the control box, as needed to regulate the wetness or dryness of the foam following the steps below:
   a. Close needle valve (NV14Y) completely in clockwise direction.
   b. Open needle valve (NV14Y) in counter-clockwise direction 3 complete turns.
   c. Continue to open needle valve in ¼ turn increments, allowing 30 seconds between adjustments, until desired consistency of foam is achieved.

READ ALL INSTRUCTIONS BEFORE OPERATING EQUIPMENT

After Use Instructions:
We recommend flushing the discharge hose and depressurizing the unit after each use.

1. Place the chemical suction line into a container of water.
2. With the unit running, open the discharge valve (HV60/HV34), and allow the unit to be flushed with fresh water for approximately 2-4 minutes or until all chemical has been discharged from system.
3. Shut off the air supply to the unit by closing the air inlet valve (BVB14).
4. Shut off the water supply to the unit.
5. Open the discharge valve (HV60/HV34) to relieve any pressure remaining in the unit.
6. Close the discharge valve (HV60/HV34) after all pressure has been relieved from the unit. Store the unit with the discharge valve (HV60/HV34) in the closed position.

Maintenance Instructions:
To keep the unit operating properly, periodically perform the following maintenance procedures:
Note: Before performing any maintenance, ensure that the unit has been disconnected from the air and water supply and depressurized according to the After Use Instructions.

- Inspect the pump (P56/P56K/P56V) for wear and leaks.
- Inspect all hoses for leaks or excessive wear. Make sure all hose clamps are in good condition and properly secured.
- Replace the filter (AFR25) located within the air regulator (R25) as needed. Clean by unthreading the air regulator bowl (ABR25) from the air regulator (R25).
- Check the chemical metering tip, suction line and strainer for debris and clean as needed.
- Drain your air compressor tank on a regular basis to help extend pump life. An air source with a high moisture content will accelerate pump wear. Note: If your air source has a high moisture content, you may wish to install a water separator (WS-20CFM) before the unit.

Troubleshooting Instructions:

- Check to ensure that the discharge hose is uncoiled properly, and that there are no kinks that could obstruct fluid flow.
- Check the air regulator bowl (ABR25) and air filter (AFR25) for debris such as water, oil, or rust particles. Clean by unthreading the air regulator bowl (ABR25) from the air regulator (R25).
- If the needle valve (NV14Y) is open too far, the pump (P56/P56K/P56V) may cycle improperly due to lack of air pressure. If this occurs, close and readjust the needle valve (NV14Y) as described in the Operation Instructions.
- Make sure proper foaming chemical and concentration are being used.
- If air passes through the pump (P56/P56K/P56V) without cycling, the pump needs to be replaced.
- If solution backs up into the air regulator bowl (ABR25), the check valve (CV38) needs to be replaced.
- If foam comes out wet, no matter where the needle valve (NV14Y) is positioned, the check valve (CV38) may need to be replaced.
- Check for proper air pressure on the air gauge (AG100). The air regulator (R25) is factory set at 50 psi (3.4 bar). Operating range is 40 to 80 psi (3 to 5 bar) with 5 to 10 CFM (141.64 to 283.30 l/min).
- If the unit operates at a reduced air pressure:
  - Check the air compressor supplying the unit. If the pressure is less than 40 psi, turn the unit off until the compressor can catch up.
  - If the air supply is 50 psi (3.4 bar) or above, check the air gauge (AG100), which should read near 50 psi (3.4 bar). If the air gauge reads more or less than 50 psi (3.4 bar), adjust the pressure by turning the knob on the top of the air regulator (R25).
- Check the chemical metering tip, suction line and strainer for debris or damage. Clean or replace as needed. To prevent damage to the unit, the strainer must always be used.
- Check for proper water pressure on the water pressure gauge (WRG14). To check the pressure:
  - With the unit running, open the discharge valve (HV60/HV34) and allow the unit to run for about 1 minute.
  - Close the discharge valve (HV60/HV34).
  - Check the water pressure gauge (WRG14). The pressure should read 30 psi (2.1 bar).
  - If necessary, adjust the water regulator using the flathead screw on the regulator body. The water pressure should be set at 30 psi (2.1 bar). Setting the pressure higher or lower may damage the unit or cause it to malfunction.

READ ALL INSTRUCTIONS BEFORE OPERATING EQUIPMENT

PARTS DIAGRAMS - UNITS WITH STANDARD FITTINGS

CONTROL BOX ASSEMBLY

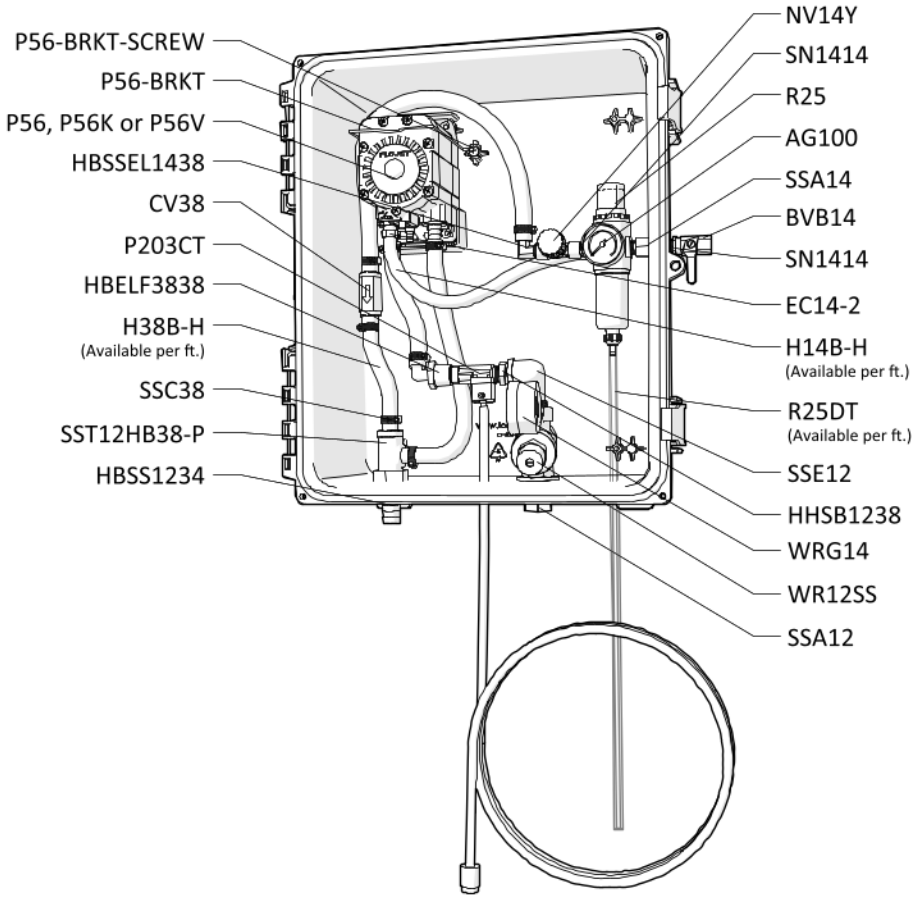

HOSE AND WAND ASSEMBLY
ITEM NUMBER: SSWA38-HA50

ZERO TIP FOAM WAND ASSEMBLY
ITEM NUMBER: SSWA38

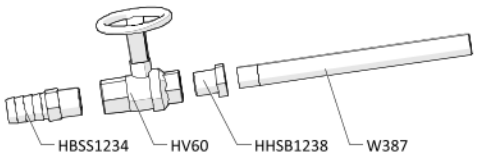

50 ft (15 m) HOSE ASSEMBLY
ITEM NUMBER: H34-50

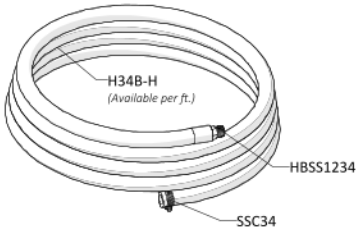

FAN TIP FOAM WAND ASSEMBLY
ITEM NUMBER: PWA34-ST

READ ALL INSTRUCTIONS BEFORE OPERATING EQUIPMENT

PARTS DIAGRAMS - UNITS WITH ALL-POLY FITTINGS

CONTROL BOX ASSEMBLY

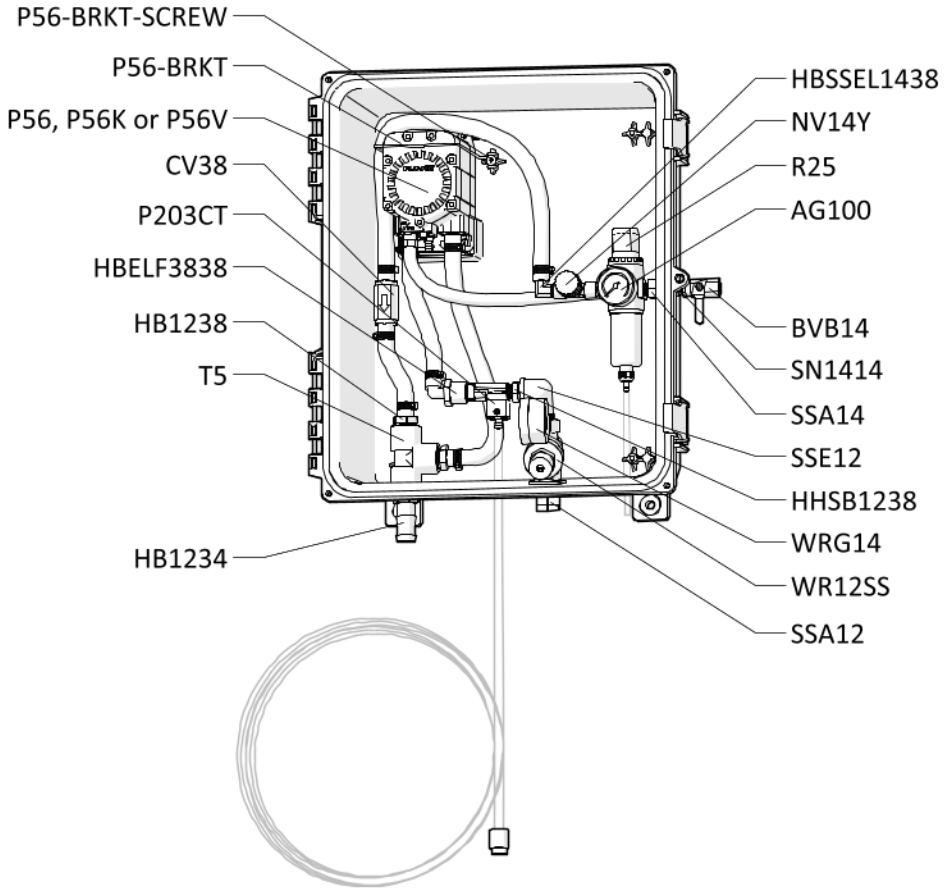

ZERO TIP ALL-POLY FOAM WAND ASSEMBLY
ITEM NUMBER: PWA34-AP

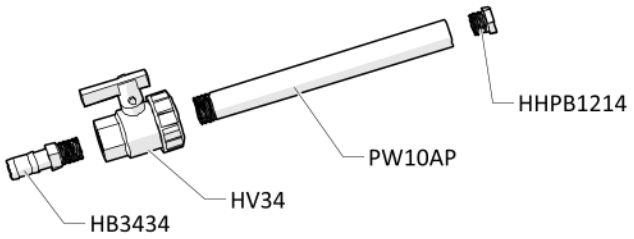

50 ft (15 m) ALL-POLY HOSE ASSEMBLY
ITEM NUMBER: H34-50-AP

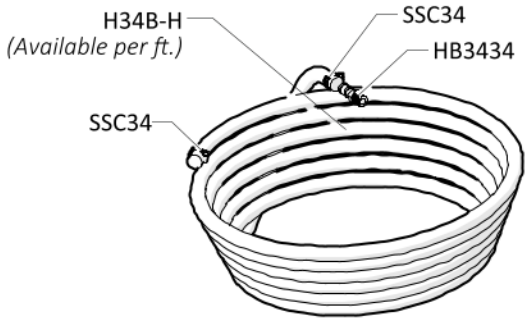

READ ALL INSTRUCTIONS BEFORE OPERATING EQUIPMENT

PARTS DIAGRAMS - SHARED COMPONENTS

ANTI-KINK SPRING ASSEMBLY
ITEM NUMBER: AKSS34

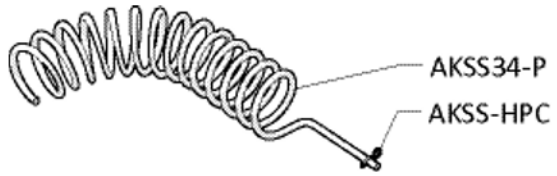

PARTS DIAGRAMS - OPTIONAL COMPONENTS

WATER SEPARATOR
ITEM NUMBER: WS-20CFM

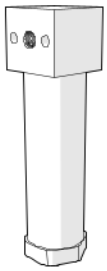

PARTS INFORMATION - LEGACY/DISCONTINUED COMPONENTS

LEGACY WATER REGULATOR ASSEMBLY

LEGACY PARTS DIAGRAM

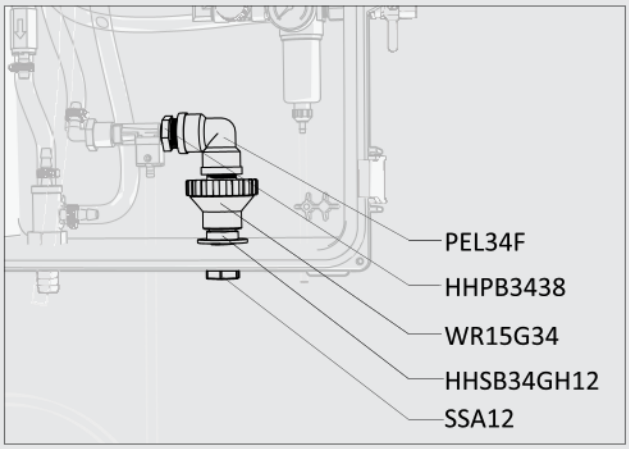

LEGACY PARTS LIST

ITEM NUMBER	DESCRIPTION
HHPB3438	HEX HEAD POLY REDUCER BUSHING 3/4in X 3/8in
HHSB34GH12	STAINLESS HEX HEAD BUSHING 3/4in MGH BY 1/2 FPT
PEL34F	3/4in FEMALE POLY PIPE ELBOW 90
WR15G34	WATER PRESSURE REGULATOR - 3/4in FGH BY 3/4in MPT Body ABS, internal parts, SS, PP and Santo

Conversion kit to upgrade to current water inlet: CK-WR12SS.

READ ALL INSTRUCTIONS BEFORE OPERATING EQUIPMENT

PARTS LIST

ITEM NUMBER	DESCRIPTION
AG100	1.5 INCH DRY MODEL 20 DUAL SCALE GAUGE
AKSS34-P	SS ANTI-KINK SPRING FOR 3/4 INCH HOSE
AKSS-HPC	ANTI-KINK STAINLESS STEEL HITCH PIN CLIP
BVB14	AIR INLET VALVE - VA BRS 025-4F4F-BT, NICKEL
CV38	PVC CHECK VALVE 3/8 BARBS - SS SPRING
EC14-2	OETIKER CLAMP 13.8
F34SS-L	SS CRIMP FERRULE 1.90inches X 1.5 inches LONG
FWLG14	.569 ID X 1.28 OD X .08 THICK FLAT WASHER SS 18-8
FWP12	7/8 ID X 1.5 OD X 0.05 THK SSFW
FWP78	7/8in BY .137 BY 1 1/4in FLATWASHER 18-8 PLN
H14B-H	1/4 INCH BLUE HOSE- GOODYEAR HORIZON - Available per ft.
H34B-H	3/4 INCH BLUE GOODYEAR HORIZON HOSE - Available per ft.
H38B-H	3/8 INCH BLUE GOODYEAR HORIZON HOSE - Available per ft.
HB1234	1/2in MPT X 3/4in HOSE BARB
HB1238	1/2in MPT X 3/8in HOSE BARB
HB3434	POLY HOSE BARB 3/4in X 3/4in
HBELF3838	HOSE BARB ELBOW 3/8" BY FPT 3/8"
HBSS1234	STAINLESS HOSE BARB 1/2 X 3/4
HBSS1438	STAINLESS HOSE BARB 1/4 MPT X 3/8 BARB
HBSSEL1438	STAINLESS HOSE BARB ELBOW 1/4 INCH NPT X 3/8 HOSE BARB
HBSSEL1814	304 STAINLESS ELBOW 1/8 INCH NPT X 1/4 INCH HOSE BARB
HHPB1214	HEX HEAD POLY REDUCER BUSHING 1/2in X 1/4in
HHSB1238	HEX HEAD S.S. REDUCER BUSHING 1/2in X 3/8
HV34	3/4in POLY BALL VALVE
HV60	1/2in STAINLESS BALL VALVE - w/ WELDED NUT
NV14Y	FLOW CONTROL VALVE - INCLUDES BLACK KNOB
NV14Y-HNDL	KNOB FOR 2839-1/4 NEEDLE VALVE
P203CT	PLASTIC INJECTOR KIT INCLUDES INJECTOR - INTAKE HOSE - FOOT STRAINER AND WEIGHT - TIP KIT
P56	PUMP WITH SANTOPRENE SEALS - INCLUDES HOSE BARBS, AIR FITTING, AND EXHAUST BARB
P56K	5700 PUMP WITH KALREZ SEALS - INCLUDES HOSE BARBS, AIR FITTING, AND AIR PORT
P56V	5700 PUMP WITH VITON SEALS - INCLUDES HOSE BARBS, AIR FITTING, AND AIR PORT
20756103B	Polypro G57 Air Port x HB Straight, w/ Viton o-ring
HB14P	1/4in BRASS HB AIR FITTING /G57/P56
HB5638	HOSE BARB FOR P56 PUMP
HB5638K	HOSE BARB FOR P56K PUMP
HB5638V	HOSE BARB FOR P56V PUMP

P56-BRKT	PUMP BRACKET- STAINLESS STEEL
P56-BRKT-SCREW	HI LO SCREW FOR RETAINING P56-BRKT
PB16138	POLYPROPYLENE CONTROL BOX - WORKING DIMS 16x13x8 - PUMP MOUNT
PB16138-GSKT	NEOPRENE GASKET 0.220 INCH ROUND CORD STOCK - 61.125 INCHES
PB16138-LATCH	LATCH FOR PB16138
PB16138-PIN	STAINLESS STEEL HINGE PIN FOR CONTROL BOX PB16138 - 1/8 x 4 3/4 x 1/2inches
PBFT-PP	MOUNTING FEET FOR POLYBOX - PB16138 - POLYPROPYLENE
PL16138	CONTROL BOX LID - POLYPROPYLENE - 16x13x8 - HINGED LOCKABLE LID
PW10	3/4in BLACK POLY PRO X 10in - FPTBE - SCH.80
PW10AP	3/4in BLACK POLY PRO X 10in - FPTOE & MPTOE - SCH.80
R25	AIR REGULATOR - 1/4fpt TWO PORT 1/8fpt TWO PORT - INCLUDES FILTER AND BOWL
AFR25	AIR FILTER for R25
ABR25	METAL AIR BOWL for R25
R25DT	3/16 X 5/16 CLEAR PVC TUBING - Avaiable per ft.
S1034FHL	10 X 3/4 PHIL FLAT HI-LO THRD SCREW 18-8
SA12B	GARDEN HOSE SWIVEL ADAPTER X 1/2 MPT
SN1212	1/2in HEX STAINLESS STEEL NIPPLE
SN1414	STAINLESS 1/4MPT X 1/4MPT NIPPLE
SNB34GH	BRASS 3/4 GH SWIVEL NUT
SSA12	STAINLESS MALE/FEMALE S.S. ADAPTOR 1/2in X 1/2in
SSA14	SS304 MALE/FEMALE ADAPTOR 1/4 NPT X 1/4 NPT
SSC34	WORM GEAR CLAMP, S/S (.75-1.25)
SSC38	WORM GEAR CLAMP, S/S (.25-.63)
SSE12	STREET ELBOW 1/2in - 316 S.S.
SSHH-F-P	S.S. LASER CUT HOSE HANGER - FLAT STOCK
SST12HB38-P	STAINLESS TEE COMBO 1/2in FPT X 3/8 in BARB
ST80200	VEEJET NOZZLE, STAINLESS STEEL 80200
STR34	1in SEAL/STRAINER FOR 3/4 GH FITTINGS
T5	1/2 POLY TEE
W387	S.S. 304 SPRAY WAND 3/8in MPT X 7in LONG - THREAD ON ONE END
WMS14	14 X 1 1/4 HEX W/H SMS SLOTT, S/S
WMS14A	5/16 X 1 1/2 STRAIGHT PLASTIC ANCHOR
WR12SS	WATER PRESSURE REGULATOR - STAINLESS STEEL - 1/2 INCH FPT
WRG14	WATER PRESSURE REGULATOR GAUGE FOR WR12SS
WS-20CFM	TSUNAMI WATER SEPARATOR 20 CFM