MAT'L	DOT
BUNA	ONE RED
VITON	ONE YELLOW + ONE WHITE
SILICONE	ONE PINK

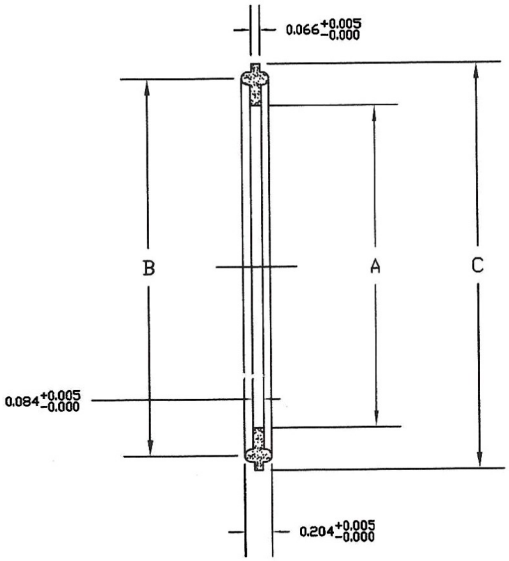

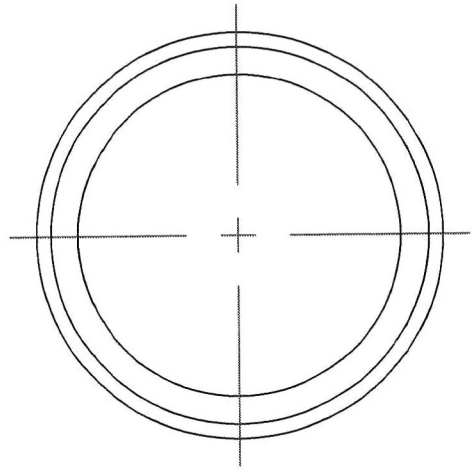

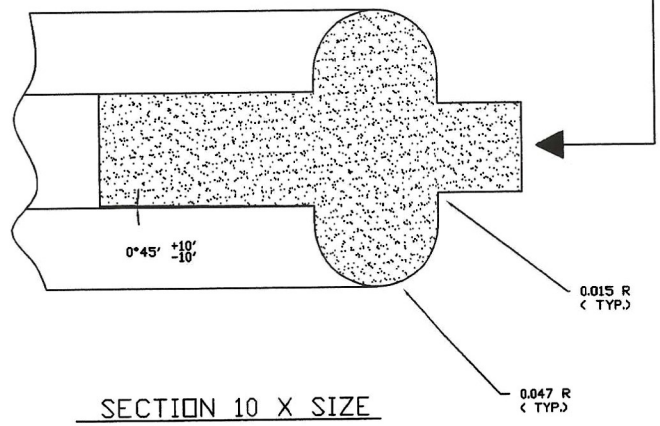

SECTION 10 X SIZE

NOTE:
GASKETS ARE TO BE FORMULATED ONLY OF INGREDIENTS AND IN THE LIMITING QUANTITIES LISTED IN THE FEDERAL REGISTER OF SEPT. 1, 1960 AND ANY ADDENDA THERE TO MUST ALSO CONFORM TO THE APPLICABLE PROVISIONS OF THE 3A SANITARY STANDARDS FOR MULTIPLE USE RUBBER AND RUBBER LIKE MATERIALS USED AS

	MAT'L	COLOR	COMPOUND	CODE
70 DURO.	BUNA N	BLACK	7A73A	U
80 DURO	VITON	BLACK	7J17A	SFY
70 DURO	SILICONE	WHITE	7H15B	X

P.N.	A	B	C
40MP-MAT'L-6"	5.810	6.176	6.520
40MP-MAT'L-8"	7.810	8.165	8.520

Distributed by:
NELSON JAMESON INC.
800-826-8302 nelsonjameson.com

GASKET FOR SANITARY
O. D. TUBING CLAMP TYP.
CONICAL END FERRULES

ENG:	DWN: JOEL	DATE: 03-02-22
MATERIAL: AS NOTED	FINSIH:	

UNLESS OTHERWISE SPECIFIED ALL DIMENSIONS ARE IN INCHES AND TOLERANCES OTHER THAN SIZE OF RAW MATERIAL SHALL BE AS FOLLOWS:
2 PLACE DECIMAL +/- .01 ANGULAR +/- 1/2 DEG.
3 PLACE DECIMAL +/- .005 FRACTIONS +/- 1/64

NEXT ASSY	BILL OF MATERIAL	FACTORY NO
USED ON		

DSO Fluid Handling
300 MCGAV DRIVE
EDISON, NJ 08837
800-52-ROTOR
732-225-9101
732-225-9100

CONFIDENCIAL PROPERTY OF DSO FLUID HANDLING CO., INC. NOT TO BE DISCLOSED TO OTHERS, REPRODUCED OR USED FOR ANY PURPOSES, EXCEPT AS AUTORIZED IN WRITING BY DSO FLUID HANDLING CO., INC. MUST BE RETURNED TO DSO FLUID HANDLING CO., INC. ON DEMAND ON COMPLETION OF ORDER OR OTHER PURPOSES FOR WHICH LENT.

CHK BY

AUTOCAD FILE: GASKET