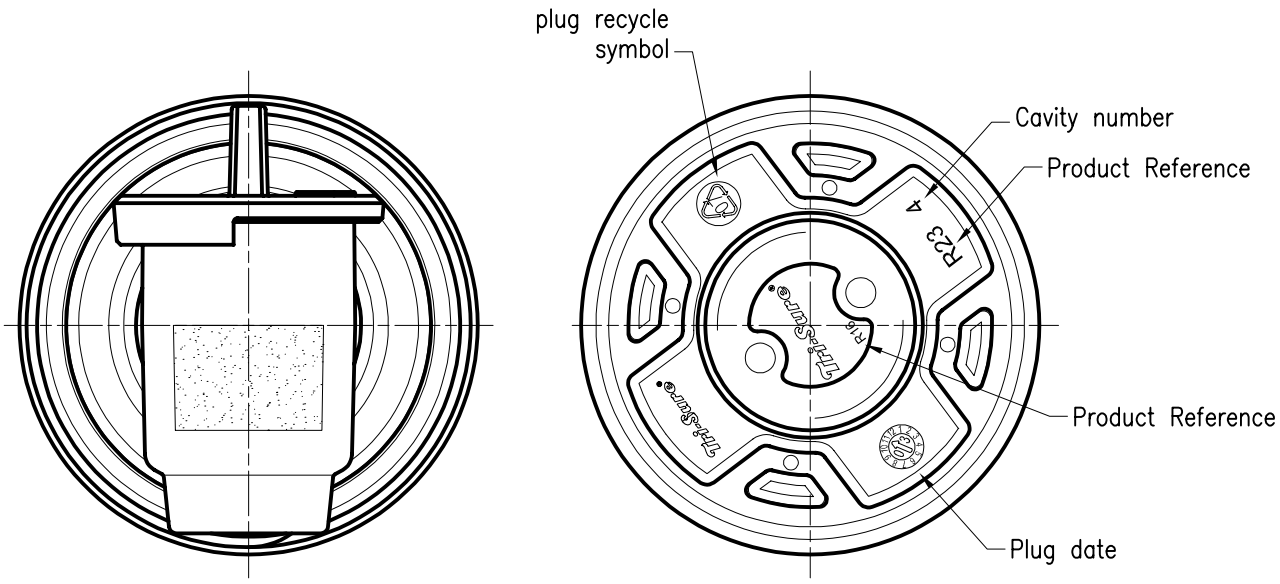

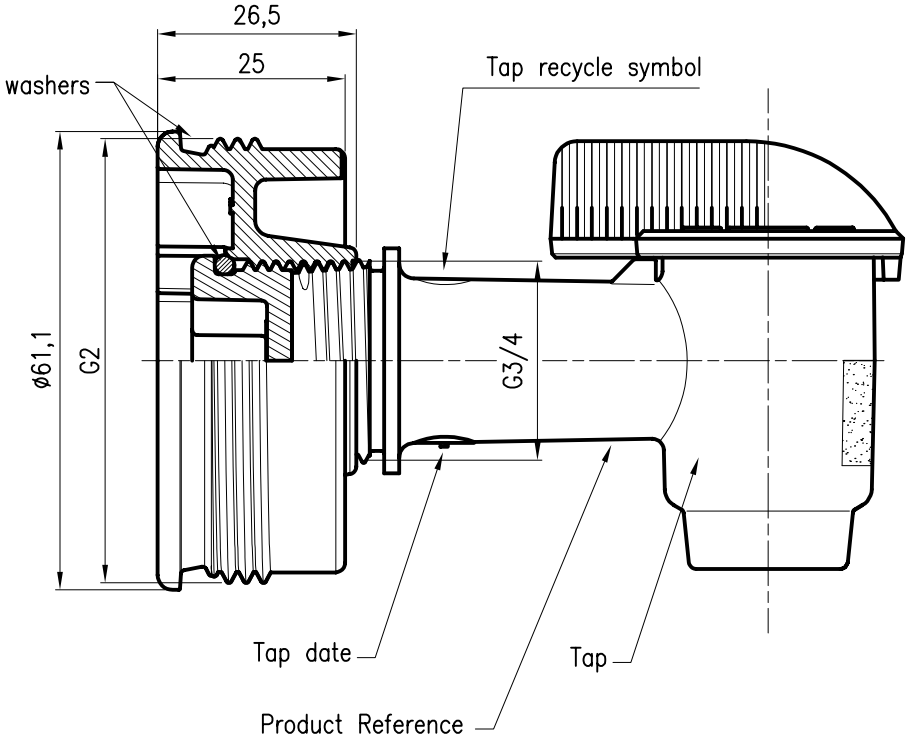

Qty	Description	Product reference	Material	Std colour
1	Plastirob(R) tap with nozzle	RD–RA	LLDPE	White
1	G3/4 Tri–Sure plastic plug	R16	PA–PP alloy	Neutral
1	G2 Tri–Sure plastic G3/4 central hole	R23	PA–PP alloy	Neutral

Drawn: Michel Boulange
Checked: Eric Lecordier
Passed: Peter de Korte

Title: G2 Tri–Sure plastic plug & standard PLASTIROB(R) tap assembly

NELSON JAMESON INC.
nelsonjameson.com 800-826-8302

Customer Drawing:	Rev:	Date Released:	Scale:	Size:
TSF–2100049	1	27–06–2008	1:1	A4

This drawing is our property and is confidential. It must not be copied or shown to third parties. Printed versions are uncontrolled.